DAYTONA 24 x 18 DK24-02

Drawings below are shown with 7.3 inch aluminum frame, for wall hung dimensions please deduct 7.3 inch

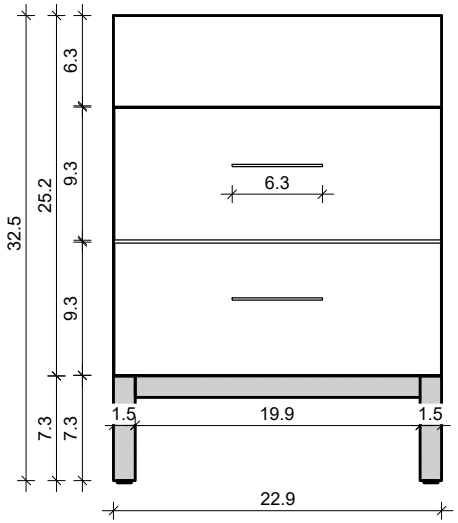

FRONT VIEW

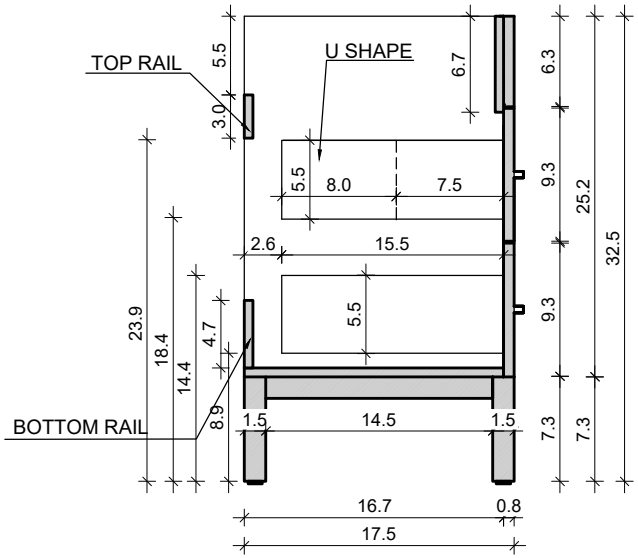

SIDE VIEW

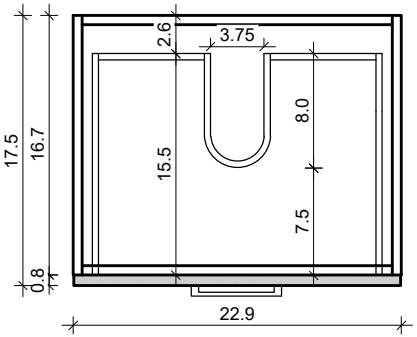

TOP VIEW

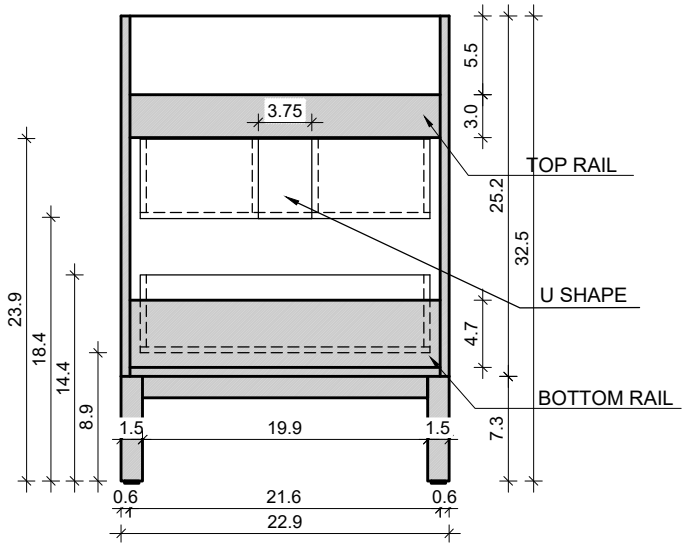

BACK VIEW