Model:2419

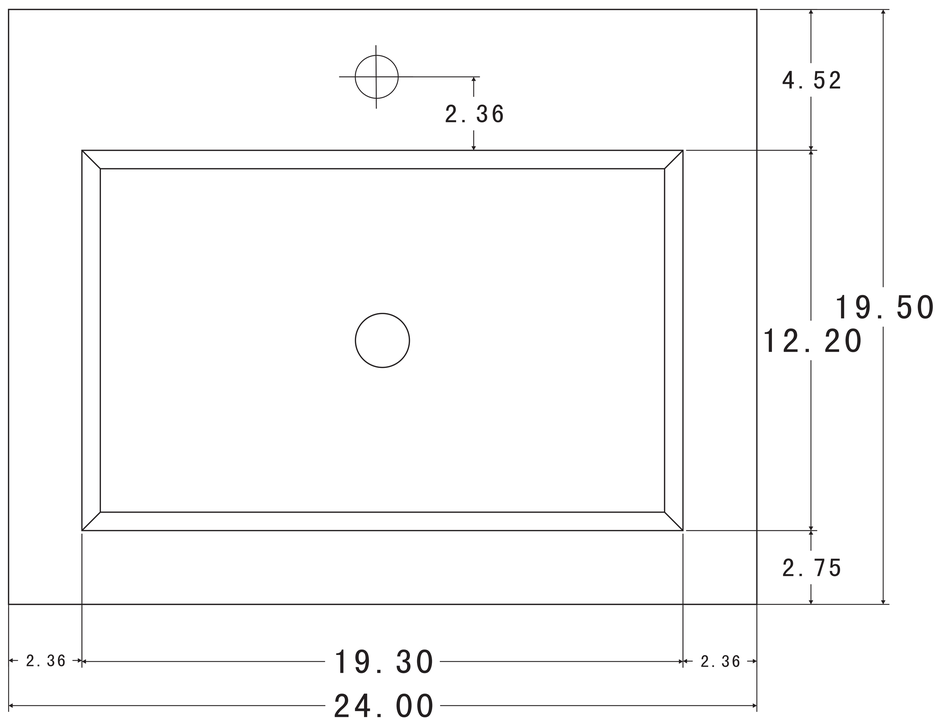

Model:2522

back splash

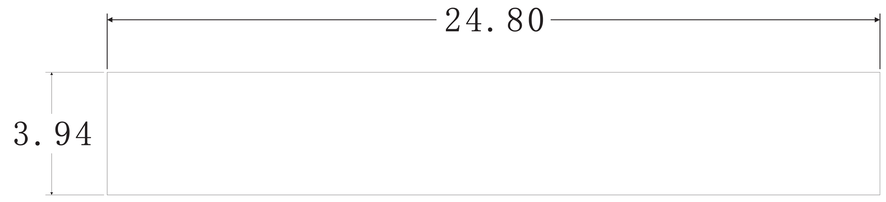

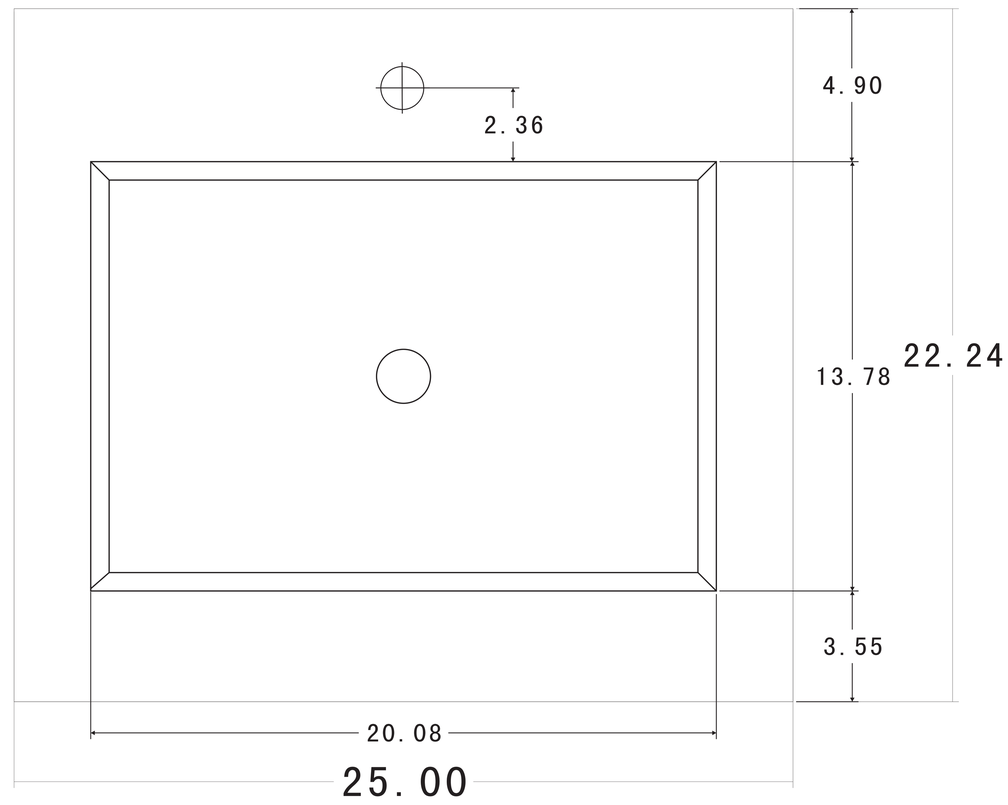

Model:3122

back splah

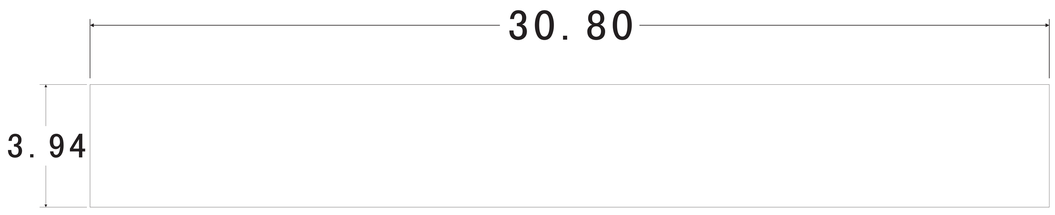

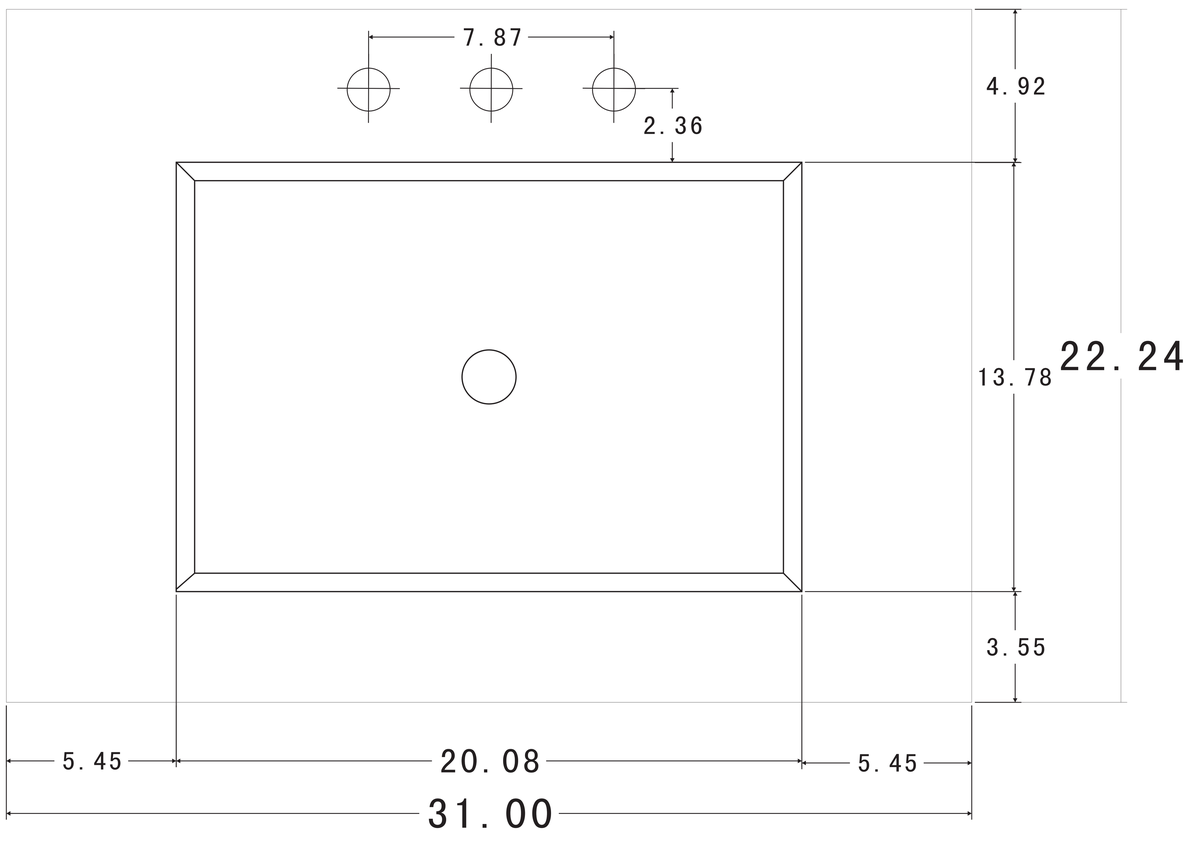

Model:3722
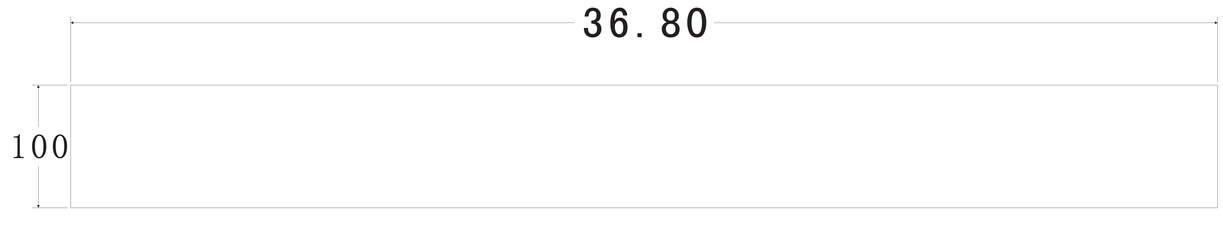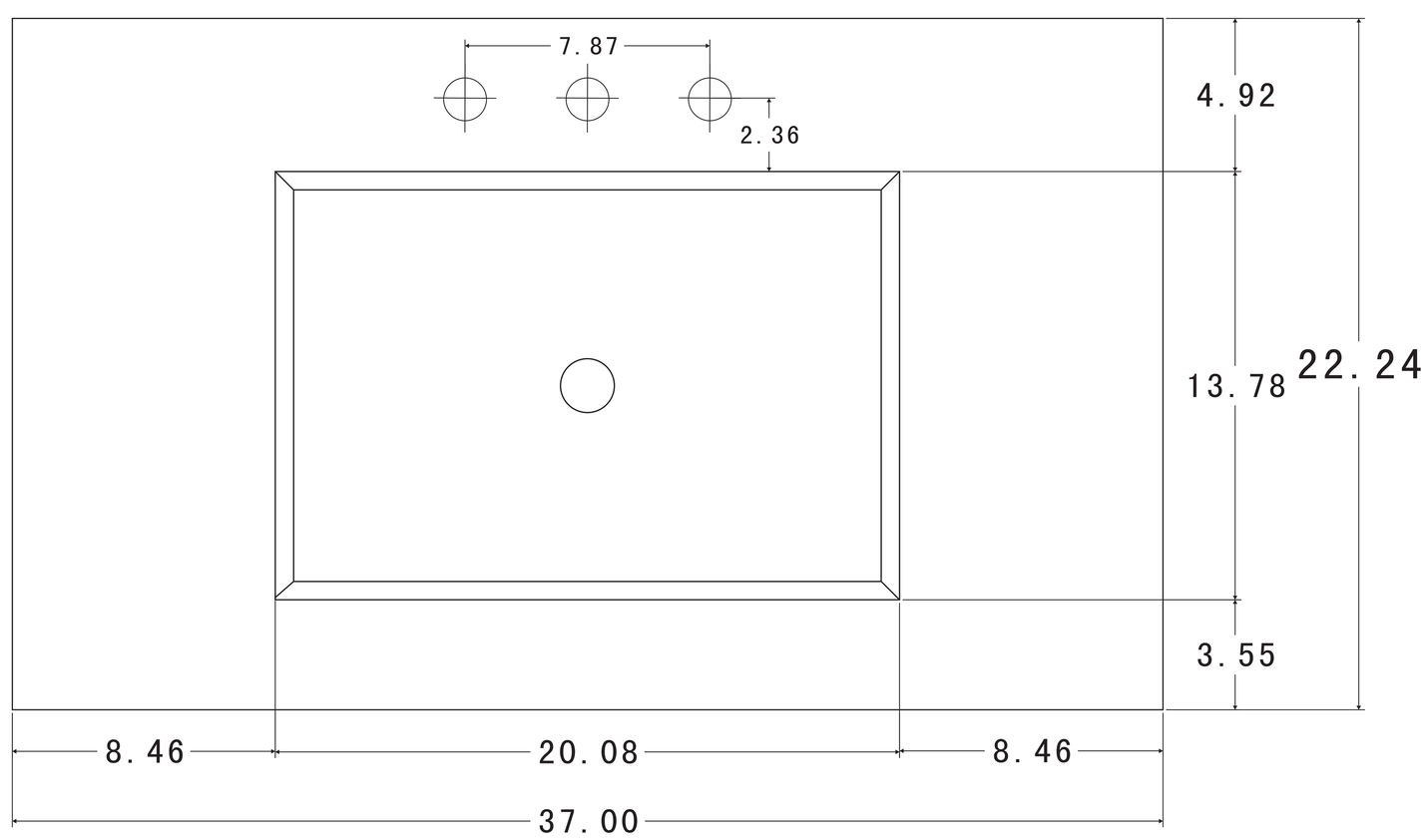
back splash