Rectangle 2-Hole Plate With Round Lever Trim For Pressure Balance Valve With Built-in Diverter (J-DIV-PBV)

JACLO
Confidence from start to finish.™

Model #: A526-TRIM-

FEATURES:

- All brass construction
- Moving lever up and down controls the volume of water and turns water on and off
- Rotating the handle left and right controls the water temperature
- Built in diverter for diverting between multiple devices (for example, diverting between a showerhead and a handshower)
- Requires rough valve J-DIV-PBV
- Lever trim is ADA compliant

AVAILABLE FINISHES:

Polished Chrome (PCH)	Satin Chrome (SC)	Bronze Umber (BU)
Satin Nickel (SN)	Pewter (PEW)	Caramel Bronze (CB)
Polished Nickel (PN)	Antique Brass (AB)	Antique Copper (ACU)
Oil-Rubbed Bronze (ORB)	Polished Brass (PB)	Polished Copper (PCU)
Vintage Bronze (VB)	Satin Brass (SB)	Rose Gold (RG)
Matte Black (MBK)	Satin Gold (SG)	Polished Gold (PG)
Black Nickel (BKN)	Bombay Gold (BG)	Jewelers Gold (JG)
Europa Bronze (EB)	White (WH)	Sedona Beige (SDB)
Tristan Brass (TB)		

SPECIFICATION DRAWING:

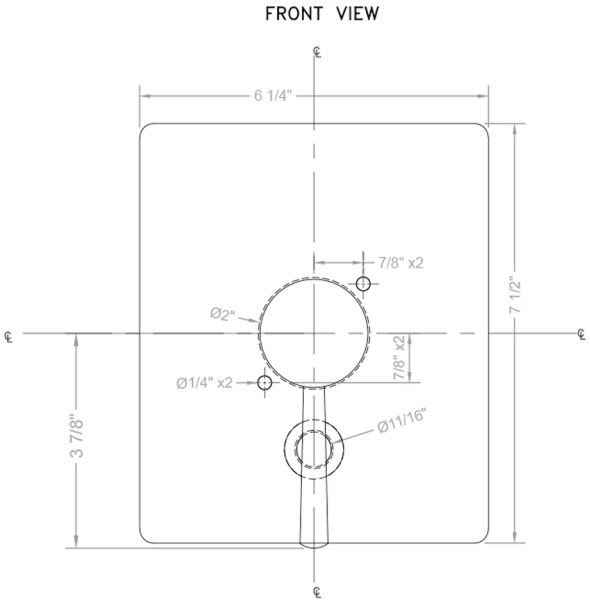

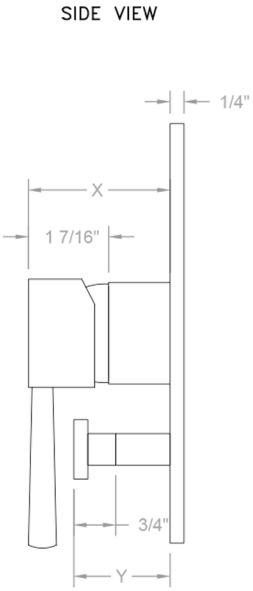

X & Y Vary With Install