CC43200,5,7,8DLK
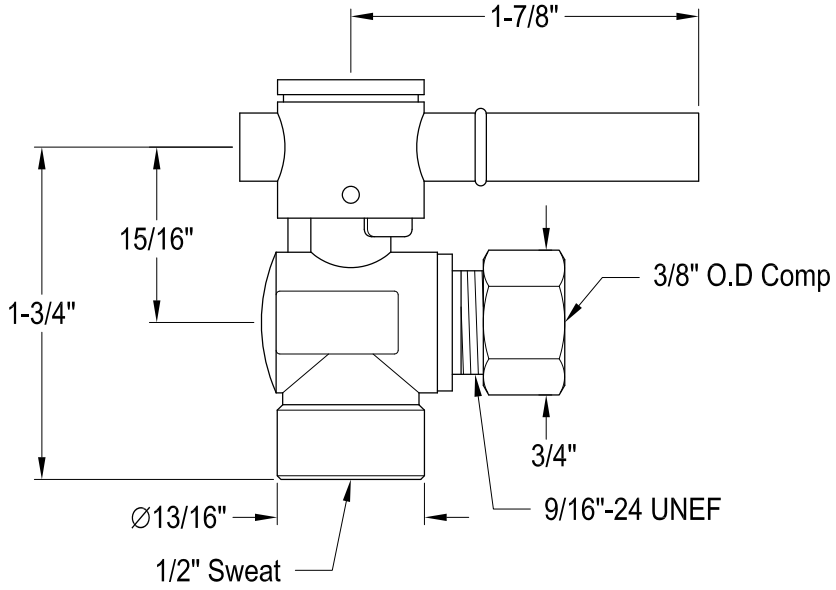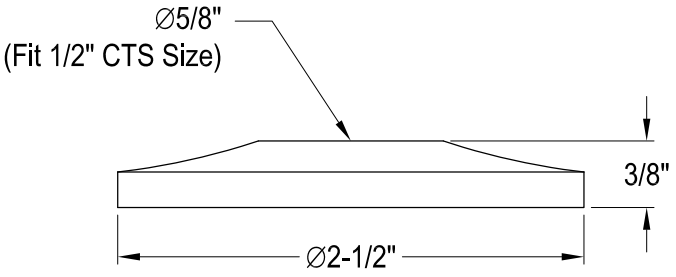
Quarter Turn Valves, 1/2" Sweat x 3/8" O.D Comp With Flange