# KB821,5,8
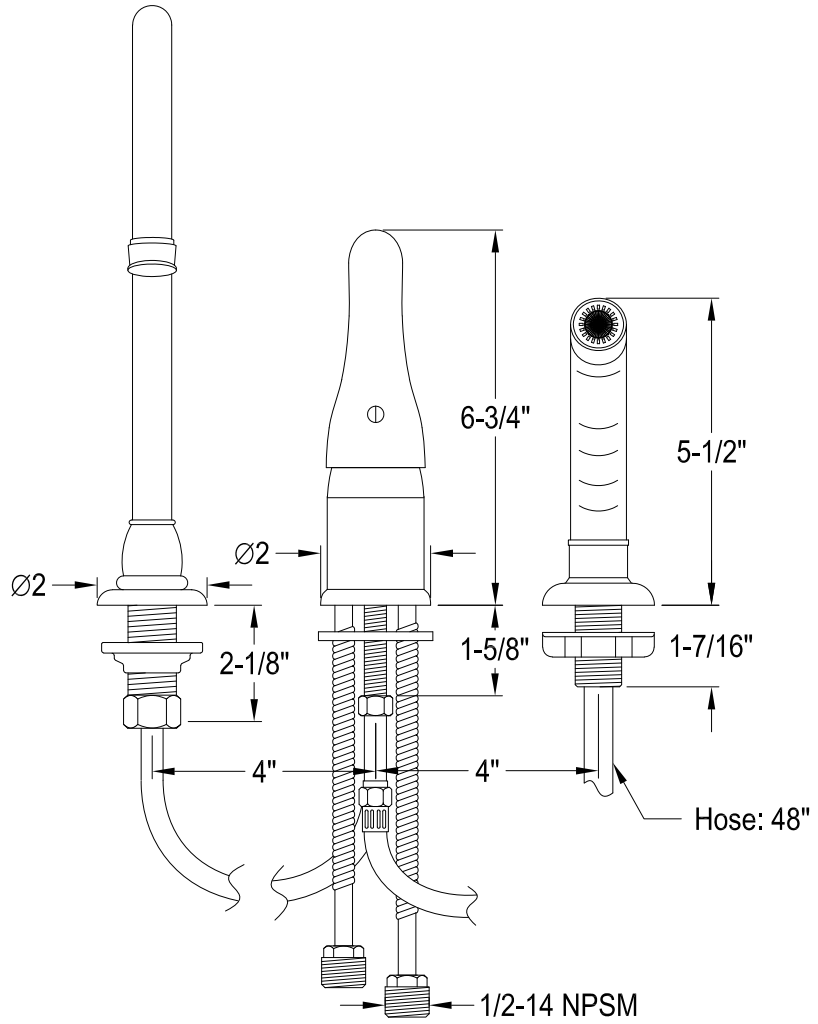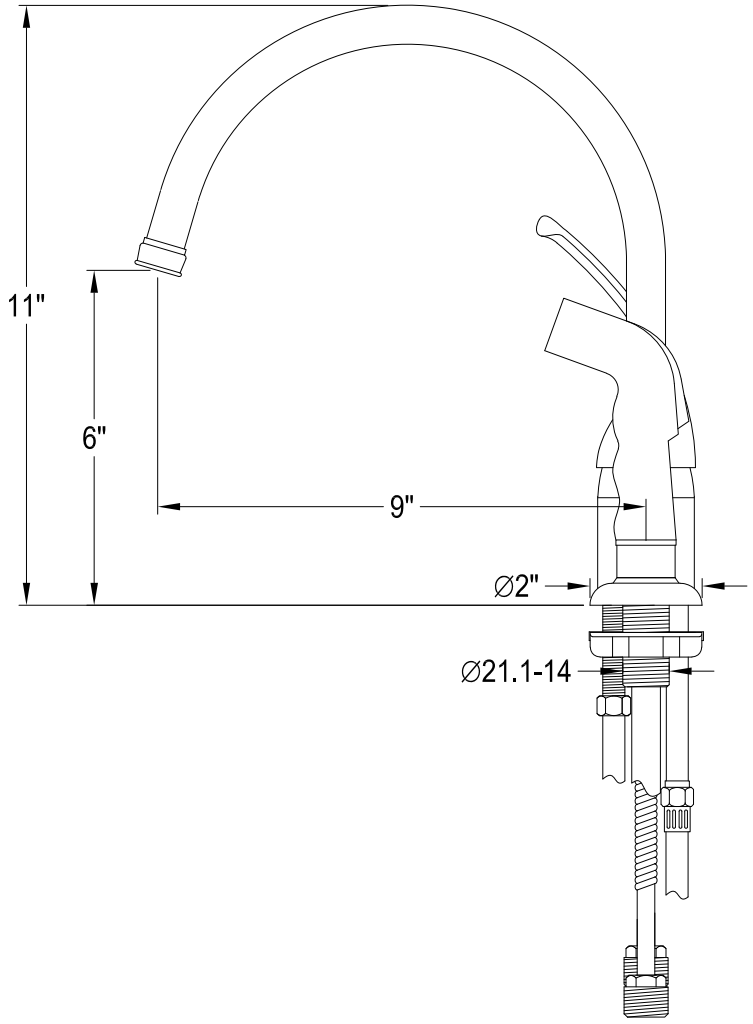
Widespread Kitchen Faucet With Sprayer