KS3100,1,2,3,5,6,7,8PX,PXAC
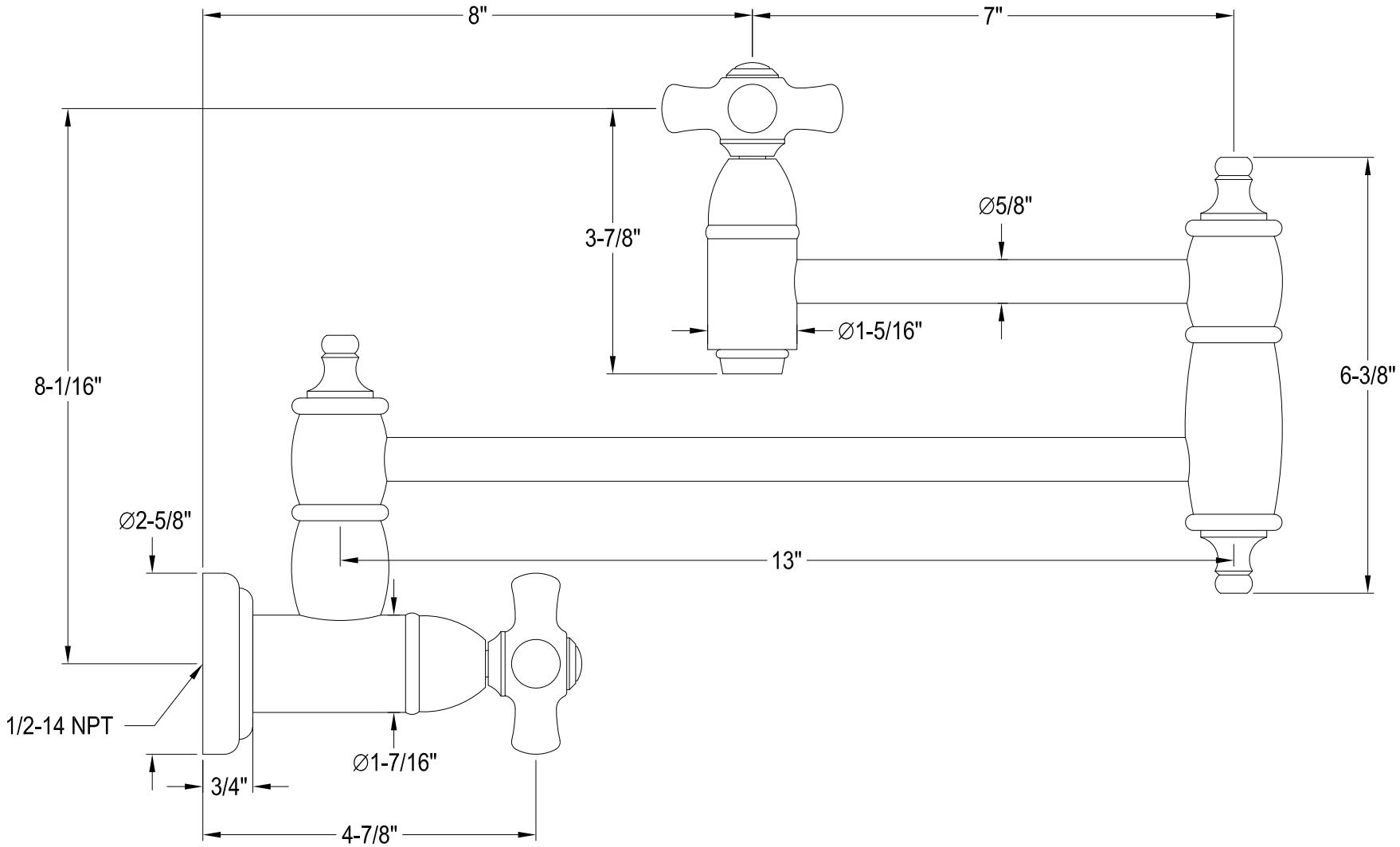
Twin Handles Wall Mount Pot Filler